Leading signaling devices



Louder &
Brighter
since 1910.

Auer Signal

Contents

p. 2 New Products

p. 6 Smart Signaling 50

p. 26 Visual Signaling Devices

p. 38 Audible Signaling Devices

p. 44 Signal Towers

CT5QM

Connect the ordinary to the superior



The CT5QM quick mount base connects classic, modular CT5 signal towers to the innovative and future-proof Smart Signaling 50 portfolio. With the CT5QM base, users can operate both signaling worlds on the same Smart Signaling 50 mounting base. The machine drawing, mounting method and wiring remain unchanged. This creates maximum flexibility – today and in the future.



Connect your classic CT5 to the Smart Signaling 50 portfolio



CT5 signal tower with CT5QM base and SA5QM quick mount foot



Smart Tower 50 with SA5QM quick mount foot

YOUR BENEFITS

- Suitable for two different signaling systems
- One mounting base for different signaling solutions
- Fast and easy M22 single-hole mounting
- No changes to machine drawing or wiring
- Future-proof solution for later product upgrades
- Reduced installation effort

APPLICATIONS

- Machines with optional Smart Signaling upgrades
- Retrofit and modernization projects
- Flexible machine concepts for different target markets
- Applications with changing customer requirements
- Systems that have to switch between classic and Smart Signaling

ORDERING DATA

Type	Part number	Housing color
CT5QM	915710911	Black

Load Indicator 50

Heavy Lifting.

Clear Signaling.

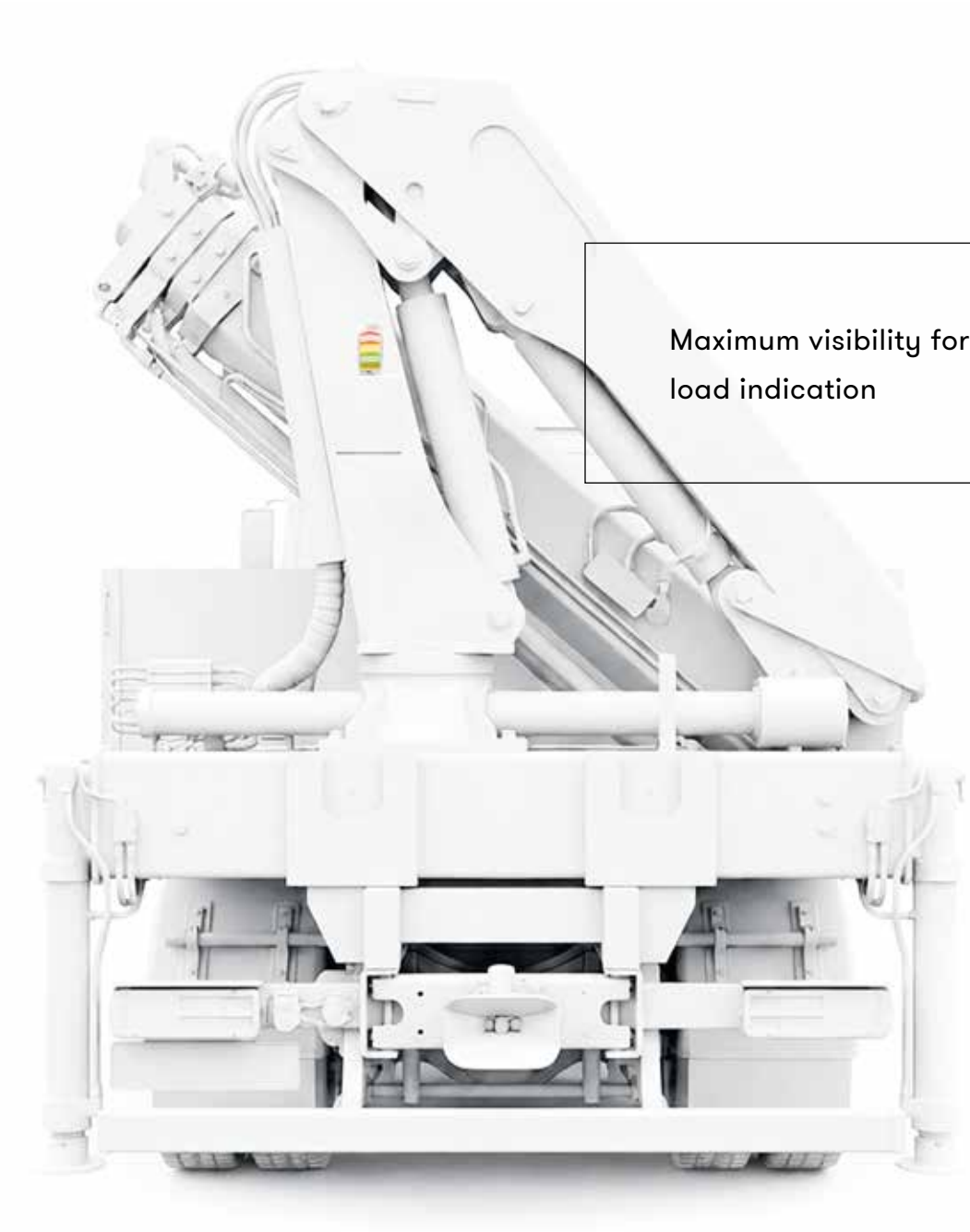

Maximum visibility for load indication

Type 4/4X | CE | IP66 | IP67 | IP69 | IP69K | IK08 | 70°C -40°C

The LI50 Load Indicator was developed specifically as a status indicator for load cranes. Its exceptionally bright, three-color LED segmentation ensures clear and unmistakable signaling, even in direct sunlight. The special internal ribbing of the lens minimizes reflections and ensures excellent signal perception. The fixed color segments in green, amber and red provide intuitive status information – even over long distances. In addition to the clear lens, we also offer a version with a black-tinted lens.

The heavier the load, the more signaling counts.



YOUR BENEFITS

- Exceptional brightness and outstanding visibility, even in direct sunlight
- Clear and intuitive status indication thanks to the three-color segment signaling
- Various signal modes: steady, flashing and strobe functions
- Maximum color brilliance with high energy efficiency

APPLICATIONS

- Load status indication on crane systems
- Status indication on port and container cranes
- Overload and warning signaling
- Signaling on mobile and stationary conveyor systems
- Industrial and outdoor applications with high demands on visibility and robustness

ORDERING DATA

Type	Part number	Segment colors	Housing color	Lens	Voltage
LI50	LI50-GAR-BT	Green/Amber/Red	Black	Black tinted	18-30 V DC
LI50	LI50-GAR-WC	Green/Amber/Red	White	Clear	18-30 V DC

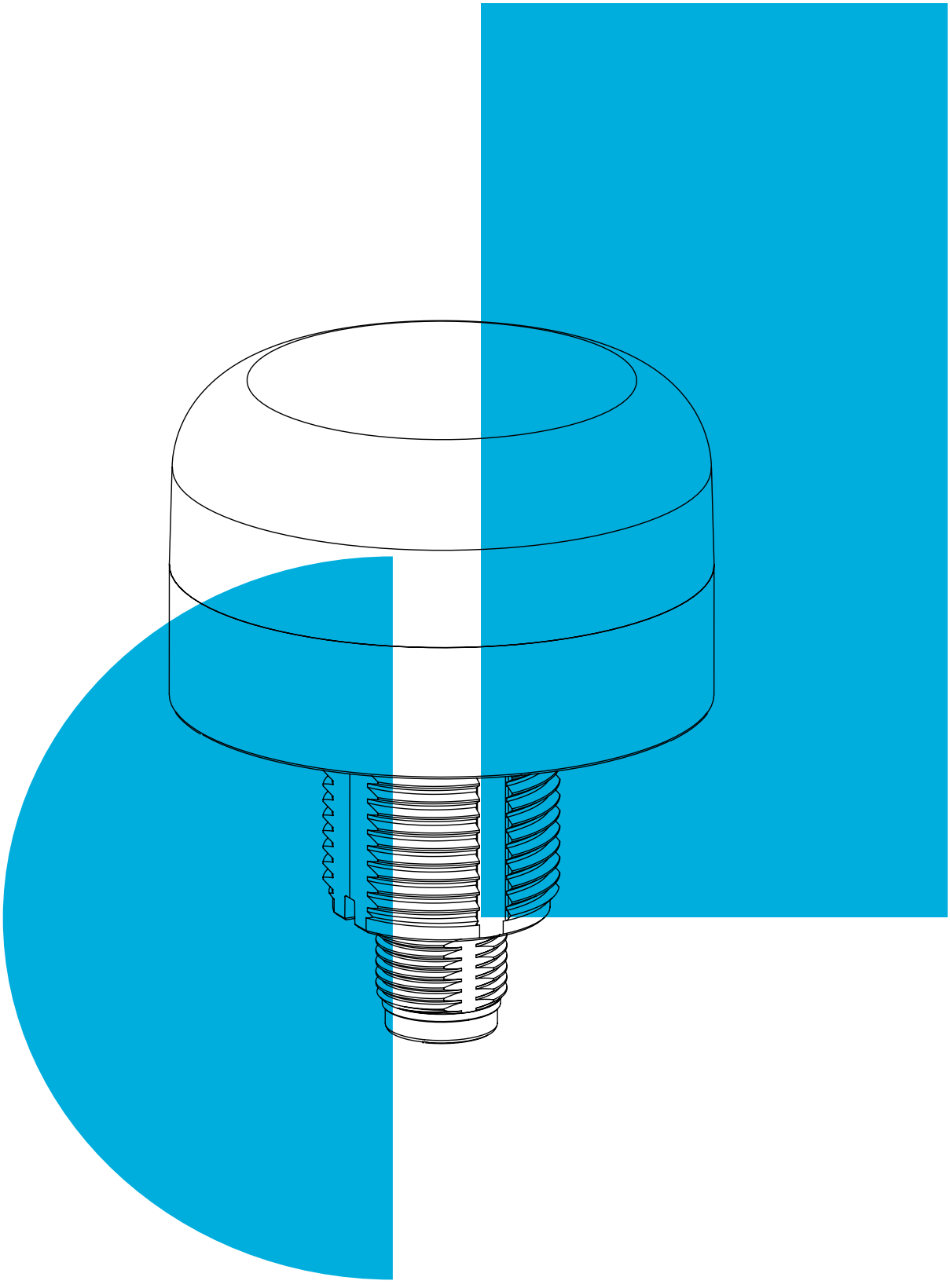

Smart Signaling 50

p. 8 Smart Concept

p. 18 Smart Dot 50

p. 22 Smart Indicator 50

p. 24 Smart Tower 50

One product family for
almost every application



Smart Concept

A unified smart signaling portfolio

Type 4/4X | IP66 | IP67 | IP69 | IP69K | IK08 | 70°C -40°C

Smart Signaling 50 combines the traditional signaling categories within a single product family.

Until now, manufacturers have developed and launched individual products or small product families within these categories (visual signaling devices, audible signaling devices, signal towers, etc.).

With the “Smart Signaling 50” signal device family, Auer Signal has developed a signal device portfolio that is based on a single platform, uses the same design language and technical functionality and, with only a few products, offers solutions for all product categories – and therefore for most industrial applications.

3 product series



ST50
Smart Tower 50



SI50
Smart Indicator 50



SD50
Smart Dot 50

3 design lines

The Smart Signaling 50 product family comes in three design lines: black, white and stainless steel. This allows you to integrate it optimally into any industrial application and environment.


ST50 black


ST50 black tinted


SI50 black


SI50 black tinted


SD50 black

For the black design line, the Smart Tower and the Smart Indicator are also available with a black-tinted lens – for even higher color contrast and maximum color brilliance.

The white design line blends ideally into bright environments or machines and recedes into the background when switched off.


ST50 white


ST50 Stainless diffuse


ST50 Stainless clear

Perfect for control cabinets and machines made of stainless steel


SI50 white


SI50 Stainless diffuse


SI50 Stainless clear


SD50 white


SD50 Stainless diffuse

The stainless steel design line is particularly attractive. It was created specifically for control cabinets and machines made of stainless steel. This allows you to ensure a harmonious and consistent appearance for your product or application. The Smart Tower and the Smart Indicator are available in two different lens designs – diffuse and clear.

3 feature lines

	Basic	Standard	IO-Link
 **SMART DOT 50**	1 color (10 animations) 2 colors (7 animations) 3 colors (5 animations) 2 colors touch (5 animations) 3 colors touch (3 animations)	7 colors (3 animations) 6 colors touch (2 animations) buzzer (8 tones)	13 predefined & 2 individually configurable colors; 15 animations & demo mode; adjustable speed, brightness, animation direction & individually configurable parameters
 **SMART INDICATOR 50**	3 colors (5 animations)	7 colors (3 animations)	13 predefined & 2 individually configurable colors; 15 animations & demo mode; adjustable speed, brightness, animation direction & individually configurable parameters
 **SMART TOWER 50**	4 colors 15 animations 2 segments	7 colors 15 animations 12 segments	13 predefined & 2 individually configurable colors; 15 animations & demo mode; adjustable speed, brightness, animation direction & individually configurable parameters



3 series
SD50
SI50
ST50

x

3 feature lines
Basic
Standard
IO-Link

x

3 design lines
Black
White
Stainless

=

Endless Applications

M22 panel-mount signal device platform / high color fidelity & energy efficiency / flexible signaling – multicolor & multifunctional / superior signaling performance compared to competitors

Smart Signaling 50 – product overview

	Smart Dot 50	Smart Indicator 50	Smart Tower 50
VISUAL			
VISUAL/AUDIBLE			
AUDIBLE			

ACCESSORIES


SA5B


SA5BF


SA5QM


SA5MR


CM12


SA5MV


SA5T


ADM30

	Smart Dot 50	Smart Indicator 50	Smart Tower 50
TOUCH BUTTONS			
DESIGN EXTENSION			
DAYLIGHT EXTENSION			

Interchangeability as the key factor of the concept

All devices in the Smart Signaling family are fully interchangeable with one another.

MECHANICAL INTERCHANGEABILITY: ALL DEVICES ARE EQUIPPED WITH A 5-PIN M12 CONNECTOR.

Since all devices in the Smart Family 50 use the same 5-pin M12 connector, they can be easily exchanged. The standardized connector ensures compatibility across the entire product family and also simplifies installation. All that is required is an M22 through-hole (as commonly used for pushbuttons); the M12 connector is then simply plugged in – which helps avoid installation errors.



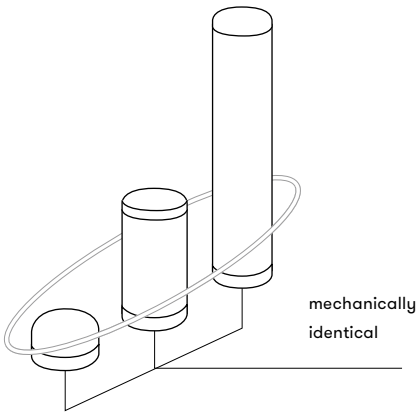

ELECTRONIC COMPATIBILITY: PLUG & PLAY

The devices of the Smart Family 50 are not only mechanically interchangeable. Their electrical connection is standardized as well: identical pins control in particular the colors green, yellow and red, which indicate the machine operating status. This means that all devices can be exchanged and still output the classic messages “ready”, “running” and “stop”. This ensures genuine plug-and-play functionality.

General specifications of the Smart Family 50

SUPERIOR OPERATING TEMPERATURE: FROM –40 °C TO +70 °C

The Smart Family 50 is designed for operation and use under extremely harsh conditions. Most smart signal devices are limited to a temperature range of –20 to +50 °C, which is sufficient for standard machine applications but not for demanding conditions such as daily use in environments with hot-water jet cleaning – for example in car washes, in the food and beverage industry, in the chemical and pharmaceutical industry, in the process industry and in other sectors. For these demanding industrial environments, the Smart Family 50, with its outstanding operating temperature range of –40 to +70 °C, is the best choice.

THE SMART SIGNALING FAMILY OFFERS COMPREHENSIVE DEGREES OF PROTECTION

The Smart Signaling series provides the following degrees of protection: IP66, IP67, IP69, IP69K.

RATED VOLTAGE 10 TO 30 V DC

The entire product family is designed for reliable operation in industrial 24 V environments. Depending on the model, the devices operate within a nominal voltage range of 10 to 30 V DC, providing a high level of operational reliability and flexibility.

Smart Protection



ACTIVE INRUSH CURRENT LIMITATION

Actively limiting the inrush current reduces the load on the controller.



ACTIVE THERMAL CONTROL

Smart Signaling devices operate at their maximum operating point with active temperature control, optimizing LED service life even under the harshest conditions.



LEAKAGE CURRENT RESISTANCE

For robust and trouble-free use in industrial environments.



SURVIVAL MODE

If a signal device operates outside the specified operating temperature, the Smart Signaling 50 products detect this themselves and reduce their output so that they continue to function without failing.



SD50

The Smart Dot 50

Our Smart Dot 50 can be used as a multicolor indicator light, as a three-color micro signal tower or as a single-color micro beacon. It is one of the most compact and versatile signal devices on the market.

Signaling with a **human touch**



Capacitive touch buttons replace conventional push buttons and combine them with visual signaling functions.

THE SMART TOUCH BUTTON

In addition to the other Smart Dot 50 options – such as Basic versions with one, two or three colors, or a 50 mm buzzer – the Smart Dot 50 series offers touch button functionality. These motion-free and wear-free buttons are designed for reliable actuation in harsh environments. A model variant with vibration feedback is also available.

Smart Dot 50 Buzzer



The Smart Dot 50 Buzzer uses piezo technology and, thanks to its sealed design, is also suitable for high-pressure cleaning (IP69K).

Superior performance compared to competing products

In the Basic version, the Auer Signal Smart Dot 50 is 4× brighter than comparable products. The comparison values were determined with green light at 24 V DC, thermally stabilized and at room temperature.

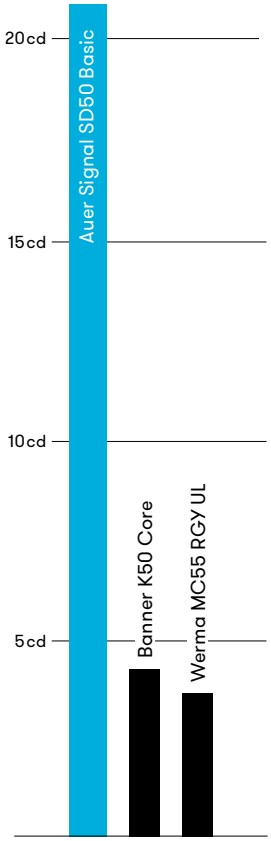

Performance comparison, Basic (discrete LED)

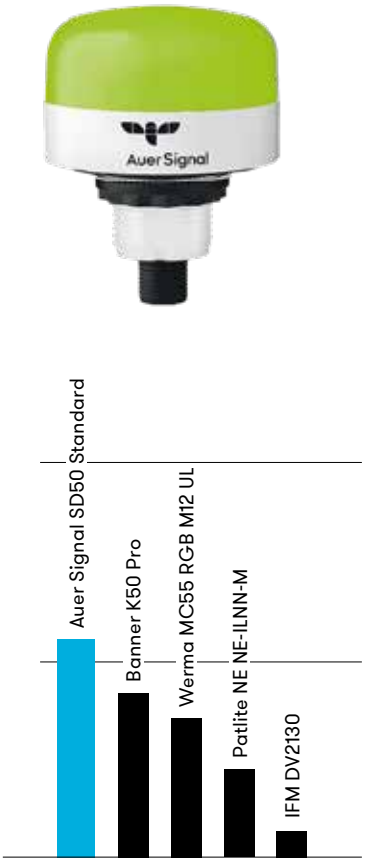

Performance comparison, Standard (RGB LED)

Available performance variants:

Basic	Standard	IO-Link
1 color (10 animations) 2 colors (7 animations) 3 colors (5 animations) 2 colors touch (5 animations) 3 colors touch (3 animations)	7 colors (3 animations) 6 colors touch (2 animations) buzzer (8 tones)	13 predefined & 2 individually configurable colors; 15 animations & demo mode; adjustable speed, brightness, animation direction & individually configurable parameters

Line Extension:

Smart Dot 50 Daylight

The sunlight performer



Built for maximum visibility in direct sunlight

Unlike the standard Smart Dot 50 models, the Smart Dot 50 Daylight is fitted with a clear lens instead of a milky one. While both versions offer exceptionally high luminosity, the Smart Dot 50 Daylight was developed specifically for use in direct sunlight. Its clear, ribbed lens prevents reflections and ensures that the signal remains clearly visible at all times – the ideal solution for outdoor use and bright environments.

Exceptional **brightness** and **energy efficiency** – optimized for applications in **direct sunlight**.

Your Benefits

EXCEPTIONAL BRIGHTNESS

High-performance indicator light with internal ribs for maximum light diffusion – guaranteeing the best visibility even in bright sunlight.

Applications

- Machines for outdoor use
- Crane systems
- Automated logistics solutions
- Production environments with strong sunlight

SD50 DAYLIGHT MODELS	SD5BD1	SD5BD2	SD5BD3
SIGNALING COLORS	1	2	3
COLOR OPTIONS	green, red, amber, blue, clear	green/red, green/yellow, green/clear, amber/clear	green/amber/red
LIGHT FUNCTIONS	steady, flashing, beat, multi-flash, high-intensity beat – all functions also available in ECO mode	steady, flashing, color alternation, beat, multi-flash, high-intensity beat – steady light in ECO mode	steady, flashing, color alternation, high-intensity beat – steady light in ECO mode
OPTIONAL PIEZO BUZZER	no	no	yes



SI50

The Smart Indicator 50

Our Smart Indicator 50 has a signaling area more than twice as large as that of an average 70 mm signal tower module. It can be used as a compact beacon on a machine, offering excellent horizontal visibility, or it can replace a small to medium-sized multicolor beacon.

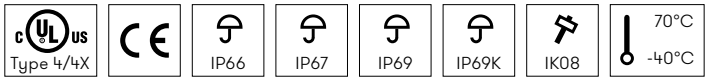

Available performance variants

Basic	Standard	IO-Link
		13 predefined & 2 individually configurable colors; 15 animations & demo mode; adjustable speed, brightness, animation direction & individually configurable parameters
3 Colors (5 Animations)	7 Colors (3 Animations)	

Beacon or mini tower?

The signaling area of the Smart Indicator is larger than that of an individual module of a signal tower. The diffuse lens eliminates the risk of false signaling caused by external light transmission. Our Smart Signaling 50 family also stands out for its color fidelity and color saturation. So that red stays red and green stays green.

IMPRESSIVE COLOR FIDELITY
Unlike other devices, a cover at the top end of the signal device prevents light from entering directly and thus protects the signal colors from fading.

COST-EFFECTIVE MINI BEACON
Thanks to its color-change capability, the Smart Indicator can also meet the requirements of a simple signal tower. For applications with low signaling requirements, the Smart Indicator is the more economical alternative to a classic signal tower.

Our Smart Indicator is both in a single device



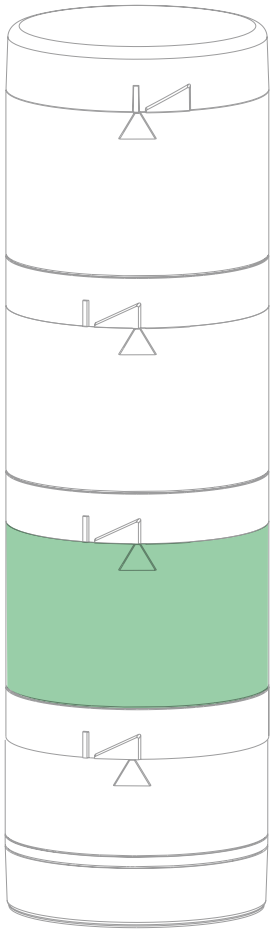



ST50

The Smart Tower 50

With up to 12 signaling segments, the ST50 bridges the gap between a signal tower and the HMI and enables the visualization of process or measurement data such as remaining time, fill level or speed.
The segment mode can be described as “the simplest HMI”.

Available performance variants:

Basic	Standard	IO-Link
		13 predefined & 2 individually configurable colors; 15 animations & demo mode; adjustable speed, brightness, animation direction & individually configurable parameters
4 colors 15 animations 2 segments	7 colors 15 animations 12 segments	

The only stainless steel signal tower on the market.





SMART LEVEL

Smart Level uses the advanced chip of the ST50 Standard devices to monitor all inputs during start-up. If a color has been selected for continuous display and a PWM signal of 10 Hz (10...90 %) is detected at a free additional input, the device shows a level indication in the specified color and at the indicated fill level. Integration is extremely simple, since every PLC has a PWM function block in its library as standard. The system serves as a cost-effective, advanced smart level solution for most application requirements and works with all common PLC systems.

SMART DIAGNOSTICS

During start-up, the Smart Tower performs a hardware error check and reports whenever a serious fault is detected (e.g. a failed LED or unexpected values), issuing an error signal. Even without measuring equipment, the operator can identify the device as defective when the first segment flashes amber.

ENERGY EFFICIENCY

The Auer Signal Smart Tower 50 is considerably more energy-efficient than any other comparable smart signal tower.

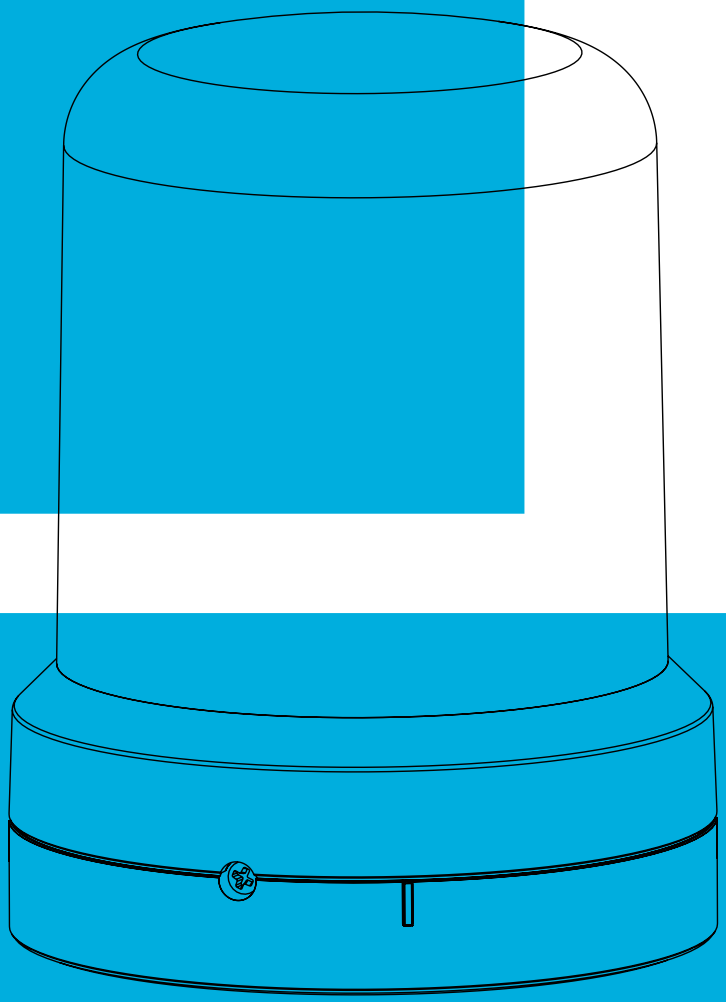

Visual Signaling Devices

p. 28 Series R

p. 30 Series R compact

p. 32 RDMOL

p. 34 Series Q

p. 36 Series M22

The brightest industrial LED beacon on the market – in 3 performance classes and 2 designs



Series R

The LED-Design-Powerhouse

The world's brightest industrial LED beacon, developed specifically for applications in direct sunlight. The simple series concept impresses with its incredible range of functions.

IP66 | 60°C -30°C | IK08



CUSTOMER BENEFITS

- Most powerful industrial LED beacon for use in direct sunlight
- Highest lateral signal effect for unambiguous signaling
- Highest signal output in a reduced design

COMMON APPLICATIONS

- Wide-area signaling outdoors
- Large mobile machinery
- Power plants
- Large-plant warning
- Bridge and toll stations

KEY FEATURES

- Brightest LED beacon < 150 mm
- All-in-one functionality
- Very bright & homogeneous 360° signaling
- 7 functions plus 5 stages
- High ingress protection ratings: IP66, UL Types 4/4X/13

CONTROL

- Conventional (via input terminal)



Audible base for Series R



With the launch of the new RDM Ultra Performance, we complete our Series R with the world's brightest LED beacon. It is 2× to 4× brighter than any other beacon on the market and reliably warns of potential hazards even in direct sunlight.

Series R compact

The compact LED-Design-Powerhouse

For high aesthetic demands and functionality





The milky white lens of the compact R Series provides a beautiful, homogeneous light pattern. The minimalistic design lets the RCMM completely disappear when it's not activated.

CUSTOMER BENEFITS
- the ideal solution for indoor applications requiring high aesthetic standards
- elegant, uniform light distribution achieved through a milky-white lens and advanced LED technology

COMMON APPLICATIONS
- public spaces with architectural requirements, such as museums, theaters, residential buildings, and offices
- office-like production environments
- pharmaceutical and laboratory industries
- customer flow management systems
- replacement for signal towers or traffic lights in commercial and light industrial settings

KEY FEATURES
- ultra-bright RGB multifunction beacon
- brilliant and uniform 360° omni-directional signaling
- offers 7 functions with 4 stages

CONTROL
- conventional (via input terminal)



RCMM multicolor model with multifunction upgrade	√	√
RCDM multifunction beacon	√	



RDMOL

low-intensity & high-impact

IP66 IK08 60°C -30°C

The versatile low-intensity **obstruction light**

Building on our successful high-performance beacon RDMHP, we have developed the RDMOL – an obstruction light certified for ICAO low-intensity categories type A, B and E, approved for structures up to 45 meters in height. In accordance with international standards, the RDMOL is available exclusively in red, with two voltage options: 24 V AC/DC and 110–240 V AC.

By **changing the Dip-Switch** the RDMOL can be used as **low-intensity type A, B or E** obstruction light.

LOW-INTENSITY TYPE A	LOW-INTENSITY TYPE B	LOW-INTENSITY TYPE E
red beacon	red beacon	red beacon
min. 10 Cd	min. 32 Cd	min. 32 Cd
fixed signal	fixed signal	flashing signal

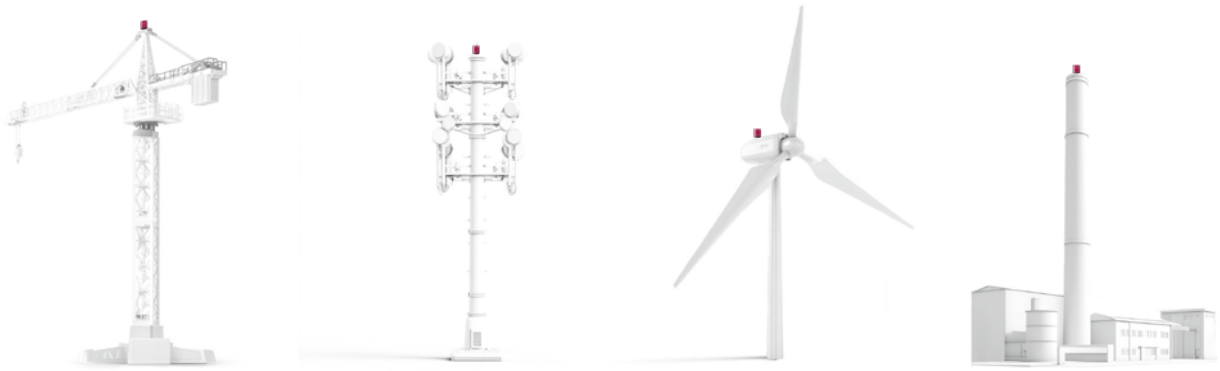

low-intensity obstruction lights = **max. 45 meters** above ground level

YOUR BENEFITS:

- One beacon meeting ICAO requirements for 3 categories (low-intensity type A/B/E)
- High protection rating: IP66
- High impact resistance: IK08
- UV-stable premium polycarbonate signaling device

COMPLIANT WITH THE REQUIREMENTS OF:

Series Q

the Bright

Square design in
3 sizes



Our Series Q is the most versatile signaling beacon, available in three sizes with a square design. The models allow for flexible combinations of different beacon colors or integration with electronic horns in the same size format.



CUSTOMER BENEFITS

- excellent lateral and frontal illumination
- can be easily combined to a traffic light solution
- audible combinations with Series A models
- particularly well-suited for wide-area outdoor signaling, such as large building premises, industrial facilities, and harbors

COMMON APPLICATIONS

- traffic light systems
- signaling for heavy machinery
- installations in industrial buildings
- crane and container technology applications
- industrial marker lights

KEY FEATURES

- bright, square beacon available in multiple sizes
- High impact resistance (IK09)

CONTROL

- conventional (via input terminal)

The classic M22 panel-mount indicator lights



Series M22

the Brightest Installable

IP65 IP67 60°C -25°C IK07

The versatile M22 panel mount series is available in three sizes: Ø 30 mm, Ø 45 mm, and Ø 65 mm. Its high luminosity and signaling effect are visible both frontally and laterally thanks to the dome-shaped design. The beacon is exceptionally durable and vibration-resistant, with a high ingress protection rating of IP65 (UL Type 4/4X) and IP67 (UL Type 6) for pre-wired models.



CUSTOMER BENEFITS

- clear and unmistakable signaling effect, outshining other components on control cabinets and panels
- space-saving connection technology for confined areas
- extensive portfolio of colors, functions, and voltage options



COMMON APPLICATIONS

- bright addition to limited switch cabinet lighting
- ideal for off-road special vehicles
- marker or warning lights and indicators for forklifts and AGVs
- signaling for heavy machinery

KEY FEATURES

- robust, bright M22 panel mount beacon
- ideal for on-machine installation due to high ingress protection ratings: IP65/67, UL Types 4/4X/13 and vibration resistance

CONTROL

- conventional (via input terminal)

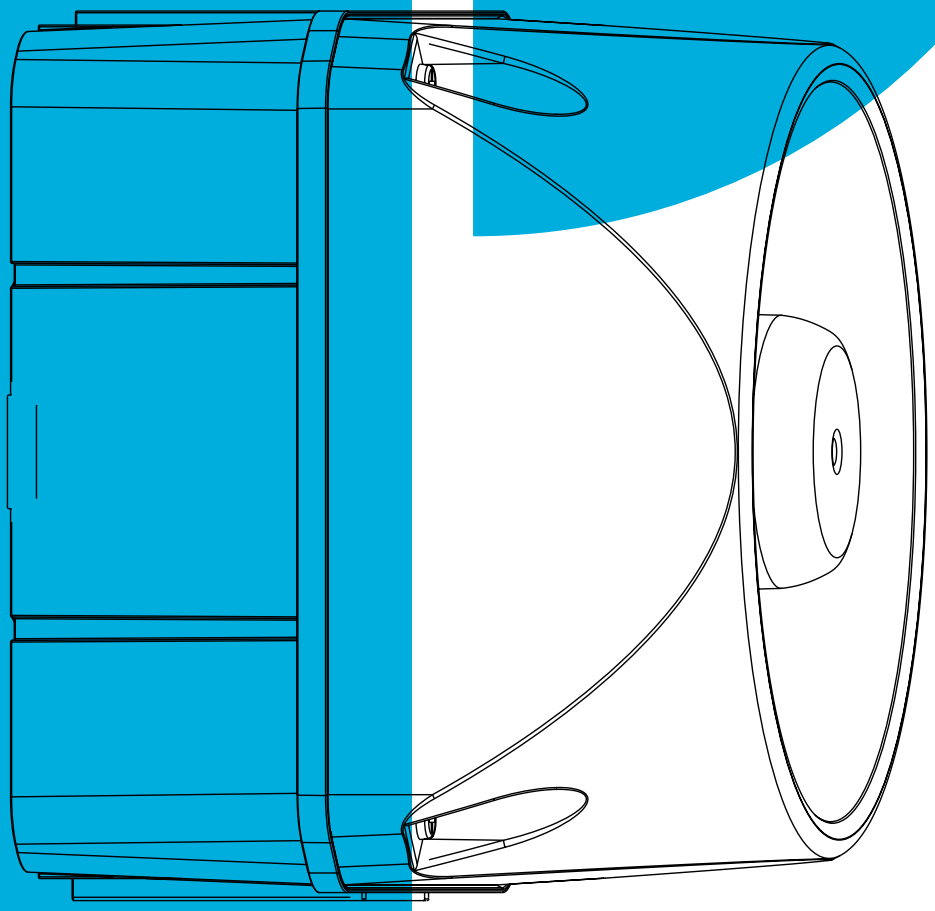

Audible Signaling Devices

p. 40 Series A
p. 42 Series M22

Series A

the Mighty

Square design in
3 sizes



IP66 | 60°C -30°C | IK09 | 120 dB

Series A is the largest and most versatile multi-tone sounder, available in three square design sizes: 94 mm, 132 mm, and 184 mm. All Series A sounders feature a high protection rating (IP66, UL Types 4/4X/13) and exceptional impact resistance (IK09), making them highly durable and vandal-proof.

CUSTOMER BENEFITS

- clear audible warning signals, even in noisy environments such as process engineering or marine industry
- distinct sound options for various situations, with external stage control
- compatible with visual combinations using Series Q beacons

COMMON APPLICATIONS

- warning system
- heavy machine signaling
- industrial building installations
- crane & container technology
- ideal for broad-area outdoor applications, including large building premises, industrial facilities, and harbors

KEY FEATURES

- loud square sounder in different sizes
- ingress protection ratings: IP66, UL Types 4/4X/13 and vibration resistance

CONTROL

- conventional (via input terminal)



The loud M22
panel-mount
buzzers in 3 sizes



Series M22

the Loudest
Installable

IP65 | 60°C -25°C | IK07 | 105dB



The versatile M22 panel mount sounder series is available in three sizes: Ø 30 mm, Ø 45 mm, and Ø 65 mm. It delivers a powerful signaling effect with a sound output of up to 105 dB.

CUSTOMER BENEFITS
- high-volume output ideal for areas with machinery and ambient noise
- easy integration into control cabinets and panels with standard M22 mounting hole
- space-efficient connection technology using screw or plug-in terminals

COMMON APPLICATIONS
- loud enhancement for limited switch cabinet sounders
- off-road special vehicles
- warning sounder for forklifts & AGVs
- machine status warning

KEY FEATURES
- industrial grade panel mount sounder
- ideal for on-machine installation due to high ingress protection ratings: IP65, UL Types 4/4X/13 and vibration resistance

CONTROL
- conventional (via input terminal)



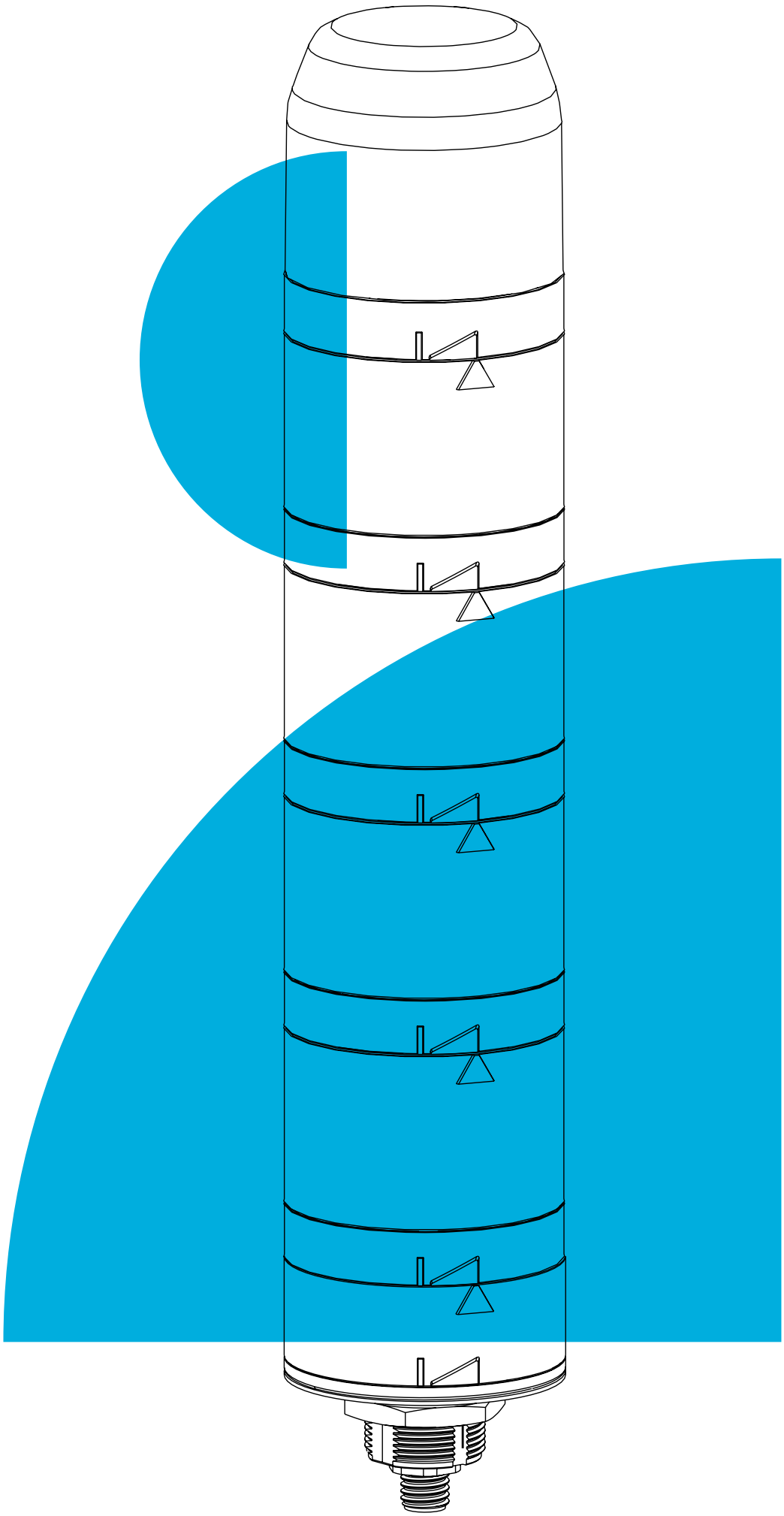

Signal Towers

p. 46 MT60

p. 48 PC7

p. 50 CT5

p. 52 ECO

p. 54 HD

Modular	40 mm Ø	50 mm Ø	60 mm Ø	70 mm Ø
PC7				√
CT5		√		
ECO	√		√	√

Pre-configured	60 mm Ø	semi-circular design 90 mm Ø
MT60	√	
HD		√

MT60

Monolithic
Simplicity

Minimalist signal tower, ideal for laboratories, hygiene applications & the pharmaceutical industry



IP66 | 50°C -25°C | IK07 | 70 dB



The signal tower for high design standards.
Developed for demanding hygiene requirements.
Easy to clean thanks to its smooth surface.

CUSTOMER BENEFITS

- Minimalist signal tower that blends seamlessly into modern industrial and building environments
- Easy cleaning thanks to the monolithic design (hardly any joints)
- No loss of effect and no false signaling thanks to the clear lens

COMMON APPLICATIONS

- Ideal for laboratories, printers and office applications
- Machines in production plants with design requirements
- Customer flow management
- Building services
- Pharmaceutical industry

KEY FEATURES

- Fixed color positions (green/yellow/red)
- Escalation options: flashing red and/or tone
- Bright & homogeneous 360° signaling
- All common mounting types

CONTROL

- Conventional (via push-in terminal or M12)

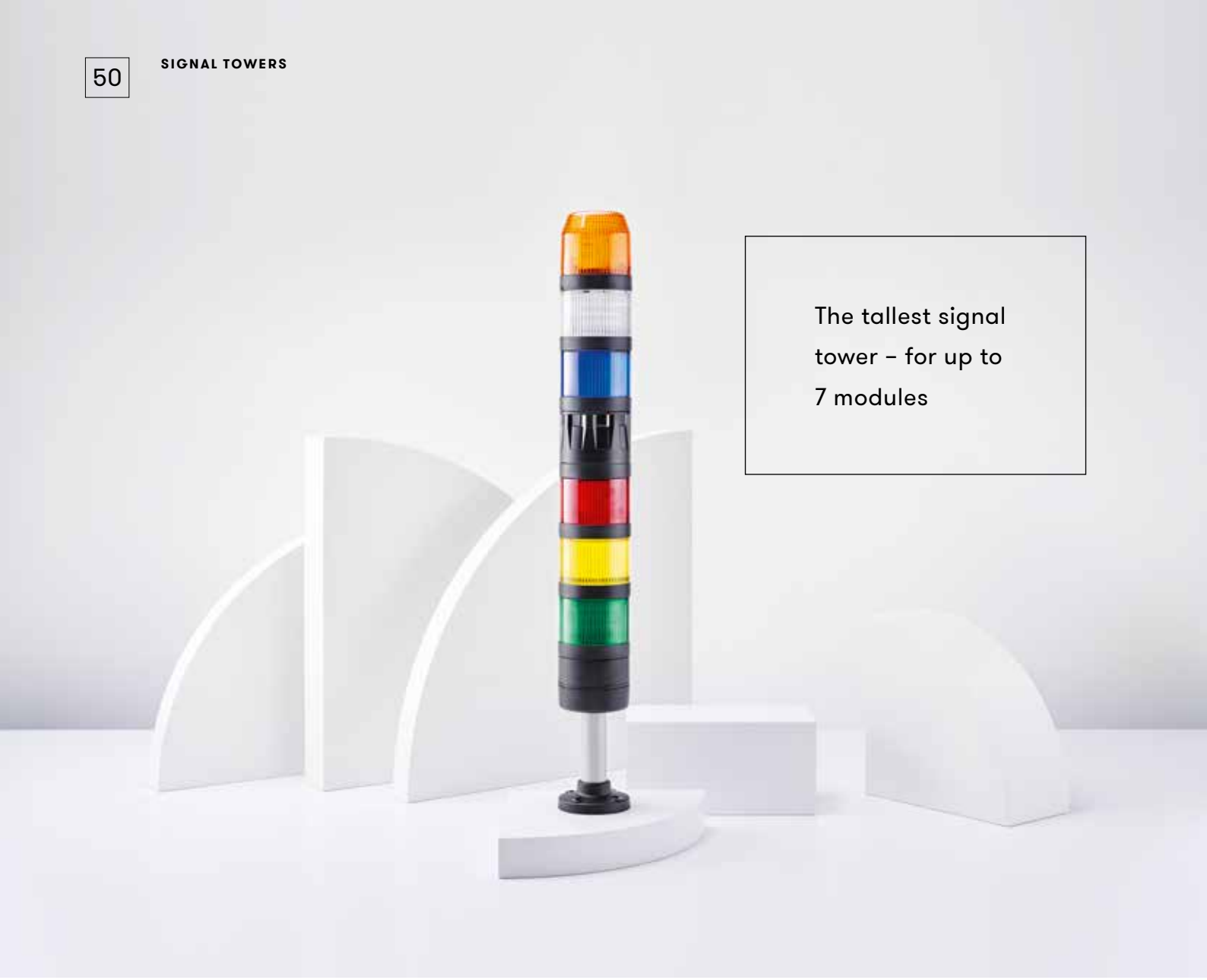

The tallest signal tower – for up to 7 modules

PC7

Nothing but perfect

Up to 6 times brighter than comparable modular signal towers. Maximum flexibility with 7 positions. Innovative MP3/voice output module for playing back audio formats.

c UL us | CE | IO-Link | IP66/67 | 70°C -30°C | IK08 | 105 dB

CUSTOMER BENEFITS

- Future-proof modular signal tower with the widest range of combination options thanks to up to 7 positions
- Even brighter top module with a 180-degree beam angle for greater signal effect
- Ideally suited to harsh conditions thanks to UV-stabilized plastics, bonded tube bases and compact electronics
- Easily integrated IO-Link solution

COMMON APPLICATIONS

- Automation (machine status)
- Plant engineering (plant status and monitoring)

KEY FEATURES

- Up to 7 modules/inputs
- Brightest and most homogeneous 360° signaling of any 70 mm signal tower on the market
- Extremely robust
- All common function ranges

CONTROL

- Conventional (via input terminal or M12)
- IO-Link (via input terminal or M12)





Cost-optimized modular
Ø 50 mm signal tower

CT5

Competitive Simplicity

IO-Link IP65 60°C -30°C IK07 95 dB

The cost-optimized 50 mm signal tower is the right choice for a wide range of basic applications.



flush
design

CUSTOMER BENEFITS

- Cost-effective modular signal tower for standard applications
- For modern industrial environments
- For higher functional requirements that the MT60 does not meet
- Also available with a white base

COMMON APPLICATIONS

- Automation (machine status)
- Plant engineering (plant status and monitoring)

KEY FEATURES

- Up to 5 modules/inputs
- Bright & homogeneous 360° signaling
- All common function ranges

CONTROL

- Conventional (via input terminal or M12)
- IO-Link (via input terminal or M12)



patented internal
contacting

ECO

the Flexible Allrounder



The flexible all-rounder among modular signal towers, in three sizes: Ø 40 mm, Ø 60 mm and Ø 70 mm. Also available with high-power LEDs for maximum signal effect.

Modular signal tower concept with an excellent price-performance ratio



ECO 40 ECO 60 ECO 70

CUSTOMER BENEFITS

- Classic modular signal tower with an extensive portfolio
- Flexibility in the choice of light sources, because on many modules the light source is replaceable

COMMON APPLICATIONS

- Automation (machine status)
- Plant engineering (plant status and monitoring)

KEY FEATURES

- Up to 5 modules/inputs
- Bright & homogeneous 360° signaling
- Very extensive portfolio
- Upgradeable

CONTROL

- Conventional (via input terminal)

HD

the Design-Tower



The best choice for 180-degree signaling indoors

Visual-audible LED signal tower in a semi-circular design for wall mounting. Optimum signaling thanks to a 180-degree beam angle.



CUSTOMER BENEFITS

- Compact, pre-configured signal tower with optimum signaling from every viewing angle
- Integrates well into its surroundings thanks to 3 different housing colors

COMMON APPLICATIONS

- Ideal for access control in building services and for visualizing machine status at eye level
- Plant and fill-level monitoring

KEY FEATURES

- Up to 5 modules/inputs
- Bright & homogeneous 180° signaling
- Pre-assembled for immediate installation
- PLC-compatible

CONTROL

- Conventional (via input terminal)

7 good reasons for Auer Signal

1 We develop in-house and manufacture to the highest industrial quality.

2 We produce exclusively products of the highest quality.

3 Products for every application: from the high-end product to the best value for money.

4 We develop and produce custom-made signal devices.

5 Usable worldwide: our signal devices meet all required industry standards.

6 We keep our promises.

7 We deliver.

Auer Signal is one of the world's leading manufacturers of signal devices

We are constantly working on new product developments. With innovation, foresight and a handshake you can rely on, we have been delighting our customers since 1910. To keep it that way in the future, we present ourselves the way our signal devices do: Louder & Brighter.

Since 1910 we have been driven by the ambition to develop technical devices that are even better

Auer Signal is an owner-managed company now in its fourth generation, with big ambitions. As a family business, trust, keeping our word and reliability matter to us.



3D models from Auer Signal

True-to-detail 3D models are available for all our signal devices. These can be particularly helpful during the planning and decision-making process when purchasing a signaling solution.



In planning software, for example, you can visualize your machine or plant together with a signal device. The 3D models also allow you to configure individual modules of a signal tower as required, create parts lists and use them for your own planning.

All available 3D models for our signal devices can be downloaded free of charge, both from the download area of our website and from the individual product detail pages.

Download 3D models here

Louder & Brighter since 1910.

HEADQUARTERS
Auer Signal GmbH
Perfektastrasse 102
1230 Wien, Österreich
T +43 1 813 82 20
F +43 1 815 99 51
office@auersignal.com
www.auersignal.com

US OFFICE
Auer Signal Inc.
1500 District Avenue
Burlington, MA 01803